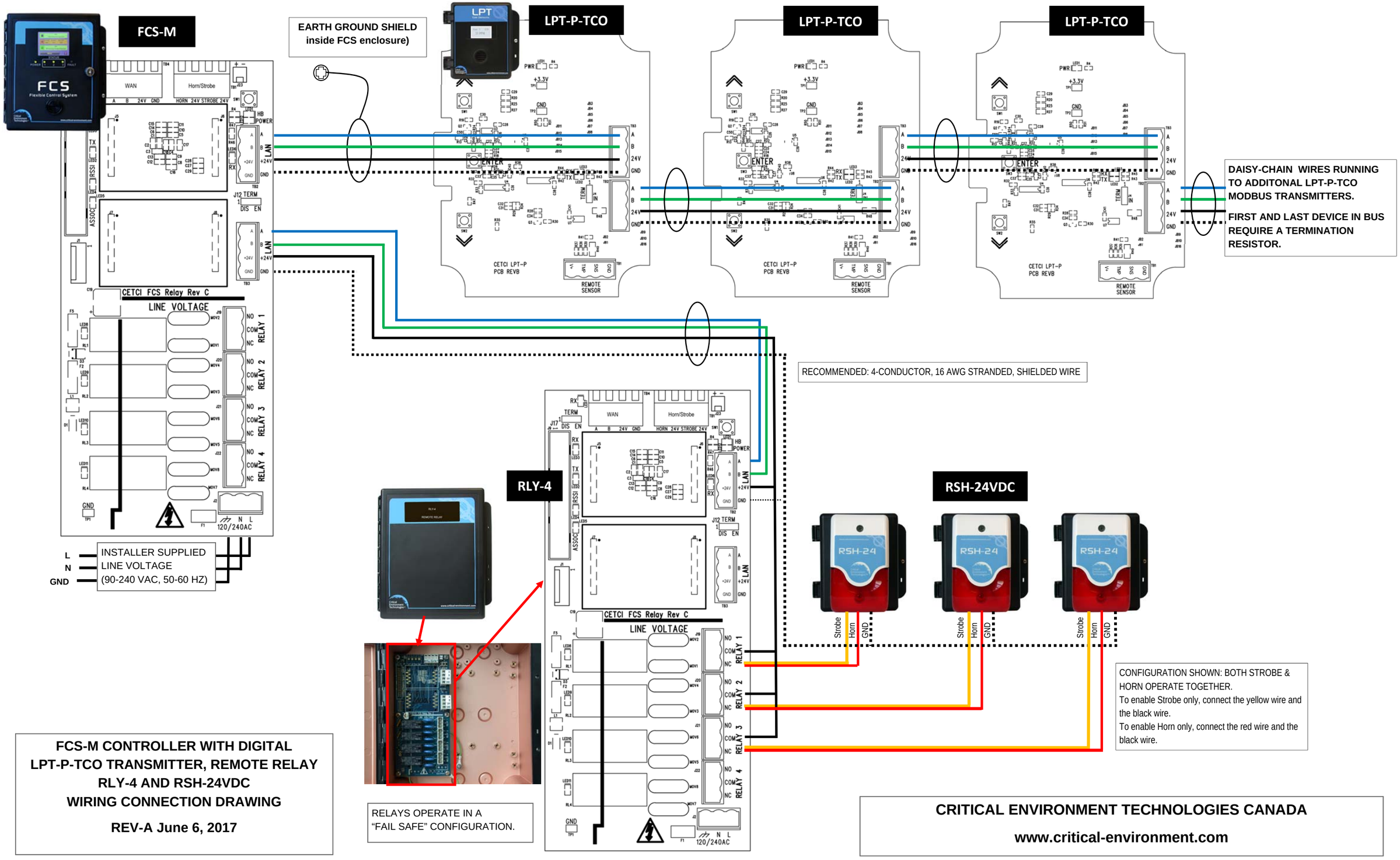
FCS-M
EARTH GROUND SHIELD inside FCS enclosure)
LPT-P-TCO
LPT-P-TCO
LPT-P-TCO
DAISY-CHAIN WIRES RUNNING TO ADDITONAL LPT-P-TCO MODBUS TRANSMITTERS.
FIRST AND LAST DEVICE IN BUS REQUIRE A TERMINATION RESISTOR.
RECOMMENDED: 4-CONDUCTOR, 16 AWG STRANDED, SHIELDED WIRE
CETCI FCS Relay Rev C
LINE VOLTAGE
RELAY 1
RELAY 2
RELAY 3
RELAY 4
120/240AC
L
N
GND
INSTALLER SUPPLIED LINE VOLTAGE (90-240 VAC, 50-60 HZ)
RLY-4
RELAYS OPERATE IN A "FAIL SAFE" CONFIGURATION.
RSH-24VDC
Strobe
Horn
GND
CONFIGURATION SHOWN: BOTH STROBE & HORN OPERATE TOGETHER.
To enable Strobe only, connect the yellow wire and the black wire.
To enable Horn only, connect the red wire and the black wire.
FCS-M CONTROLLER WITH DIGITAL LPT-P-TCO TRANSMITTER, REMOTE RELAY RLY-4 AND RSH-24VDC WIRING CONNECTION DRAWING
REV-A June 6, 2017
CRITICAL ENVIRONMENT TECHNOLOGIES CANADA
www.critical-environment.com