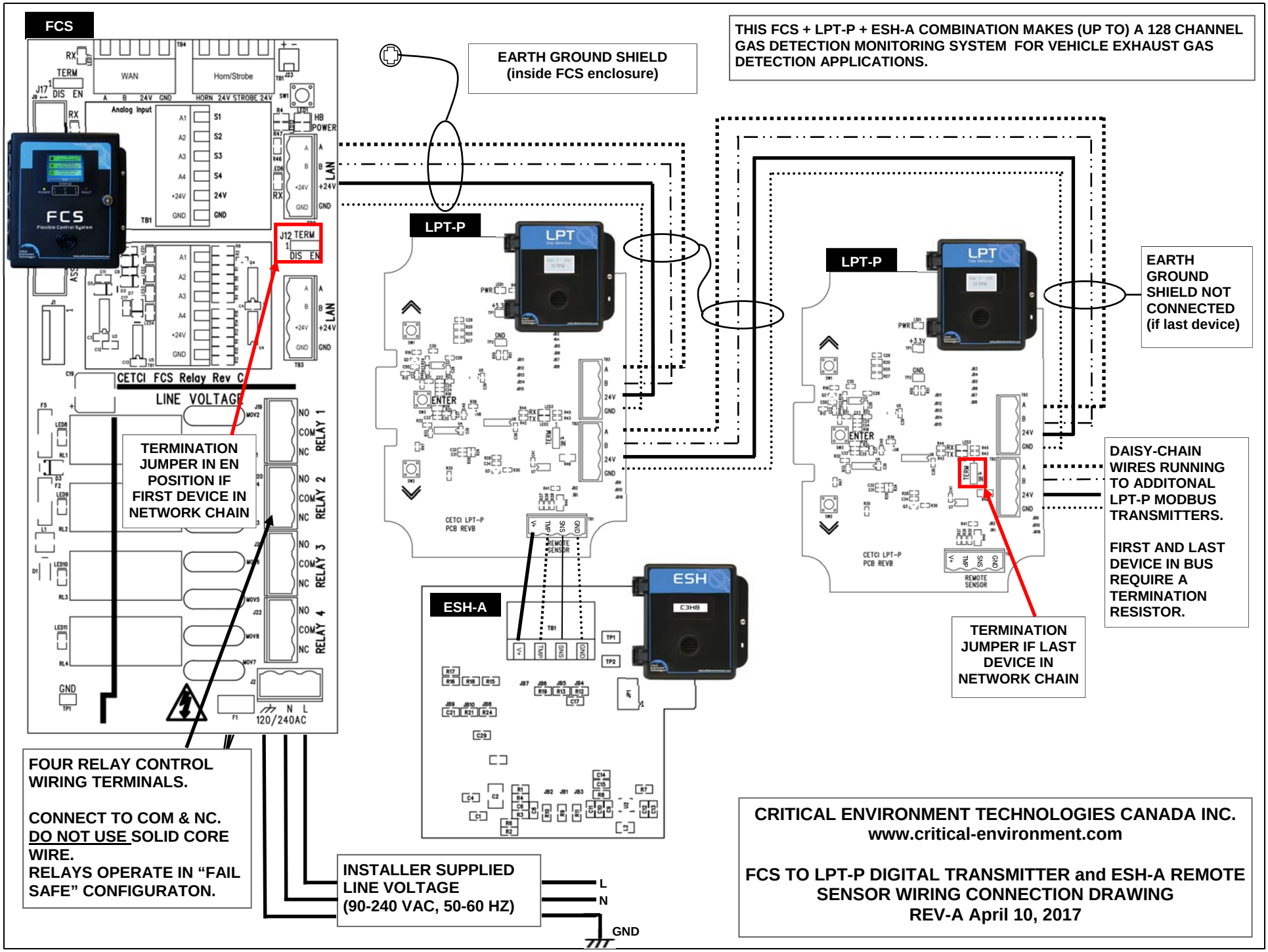
FCS
THIS FCS + LPT-P + ESH-A COMBINATION MAKES (UP TO) A 128 CHANNEL GAS DETECTION MONITORING SYSTEM FOR VEHICLE EXHAUST GAS DETECTION APPLICATIONS.
EARTH GROUND SHIELD (inside FCS enclosure)
LPT-P
LPT-P
EARTH GROUND SHIELD NOT CONNECTED (if last device)
DAISY-CHAIN WIRES RUNNING TO ADDITONAL LPT-P MODBUS TRANSMITTERS.
FIRST AND LAST DEVICE IN BUS REQUIRE A TERMINATION RESISTOR.
TERMINATION JUMPER IN EN POSITION IF FIRST DEVICE IN NETWORK CHAIN
TERMINATION JUMPER IF LAST DEVICE IN NETWORK CHAIN
ESH-A
FOUR RELAY CONTROL WIRING TERMINALS.
CONNECT TO COM & NC.
DO NOT USE SOLID CORE WIRE.
RELAYS OPERATE IN "FAIL SAFE" CONFIGURATON.
INSTALLER SUPPLIED LINE VOLTAGE (90-240 VAC, 50-60 HZ)
L
N
GND
CRITICAL ENVIRONMENT TECHNOLOGIES CANADA INC.
www.critical-environment.com
FCS TO LPT-P DIGITAL TRANSMITTER and ESH-A REMOTE SENSOR WIRING CONNECTION DRAWING
REV-A April 10, 2017